OVERSTEEL ULTIMET SERIES

ASSEMBLY INSTRUCTIONS

COMPONENTS

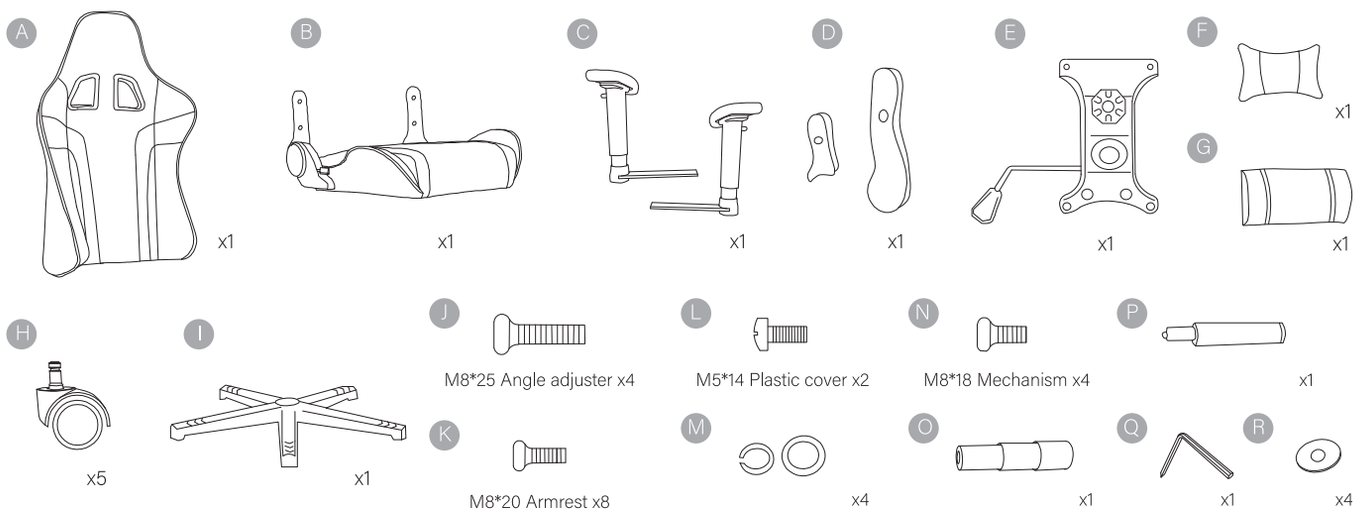

MOUNTING STEPS

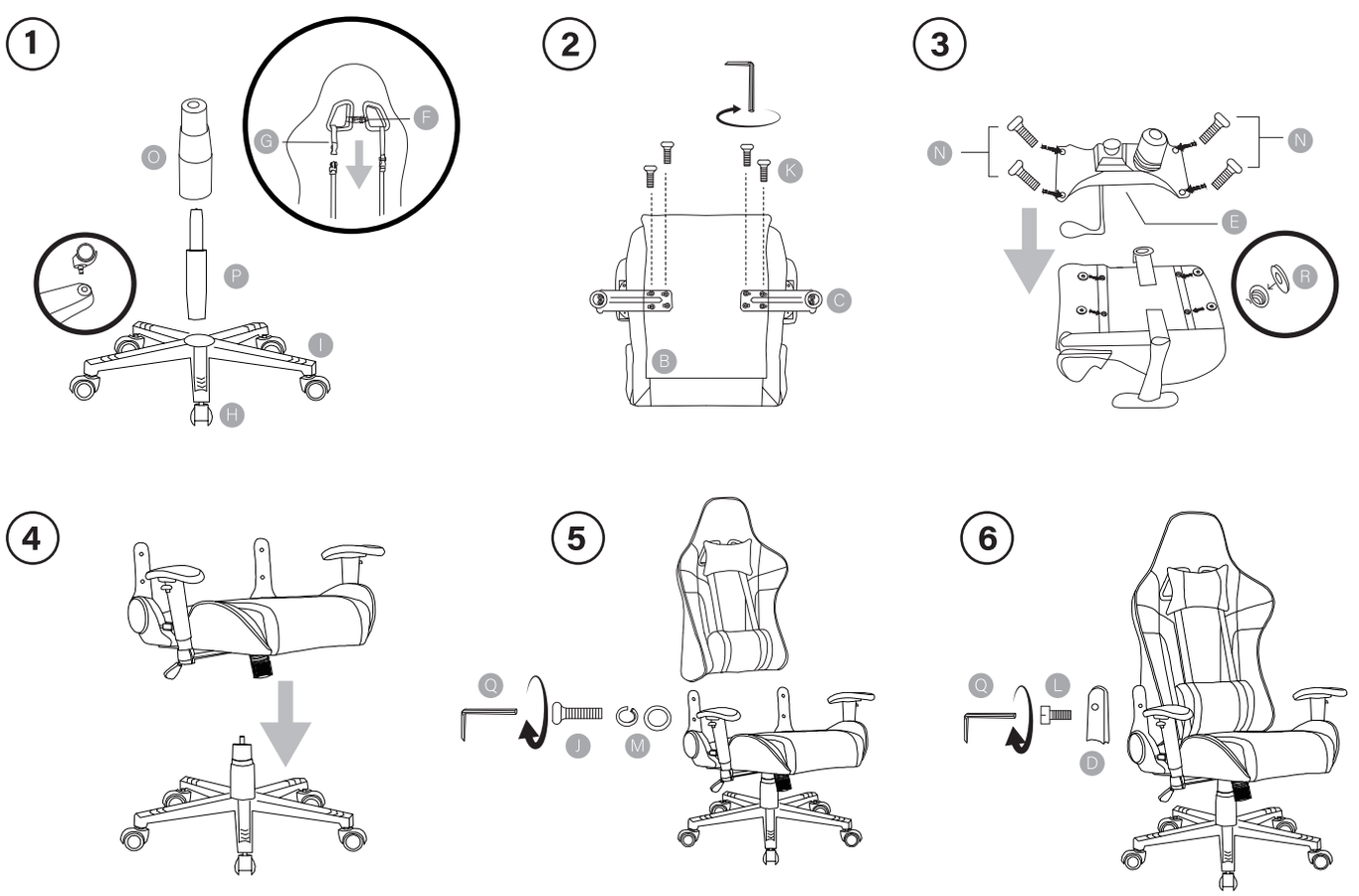

OVERSTEEL

ULTIMET SERIES

GAMING CHAIR

NEXT GAMING GENERATION

USER MANUAL